BASIC SERIAL COMMAND SPECIFICATIONS

PLC-XT25

Ver 0.01

TENTATIVE

SANYO Electric Co., Ltd.
AV Company
Projector BU

ー CONTENTS ー

1. Overview....4
2. Serial Interface Specifications....4
   2.1. Transfer Specifications....4
   2.2. Connection....4
3. Notes for Communication....5
4. Functional Execution Command Table....6
5. Status Read Command Table....8
6. Functional Execution Command....9
   6.1. Format....9
   6.2. Command Pipelining....9
   6.3. Transfer Example....9
   6.4. Operation Requirements....10
   6.5. POWER ON Command....11
   6.6. POWER OFF Command （Quick Power OFF）....11
   6.7. POWER OFF Command....11
   6.8. INPUT 1 Command....11
   6.9. INPUT 2 Command....11
   6.10. INPUT 3 Command....12
   6.11. NETWORK Command....12
   6.12. VOLUME + Command....12
   6.13. VOLUME – Command....12
   6.14. SOUND MUTE ON Command....12
   6.15. SOUND MUTE OFF Command....13
   6.16. VIDEO MUTE ON Command....13
   6.17. VIDEO MUTE OFF Command....13
   6.18. Screen Normal size Command....13
   6.19. Screen Wide size Command....13
   6.20. MENU ON Command....13
   6.21. MENU OFF Command....14
   6.22. DISPLAY CLEAR Command....14
   6.23. BRIGHTNESS + Command....14
   6.24. BRIGHTNESS – Command....14
   6.25. INPUT 2 VIDEO Command....14
   6.26. INPUT 2 Y,Pb/Cb,Pr/Cr Command....14
   6.27. INPUT 2 RGB Command....15
   6.28. IMAGE Command....15
   6.29. ON START Setting Command....15
   6.30. ON START Cancel Command....15

6.31. Power Management Ready Command 15
6.32. Power Management OFF Command 15
6.33. Power Management Shut down Command 16
6.34. D.ZOOM + Command 16
6.35. D.ZOOM – Command 16
6.36. INPUT 3 AUTO Command 16
6.37. INPUT 3 VIDEO Command 16
6.38. INPUT 3 S-VIDEO Command 16
6.39. POINTER RIGHT Command 17
6.40. POINTER LEFT Command 17
6.41. POINTER UP Command 17
6.42. POINTER DOWN Command 17
6.43. ENTER Command 17
6.44. FREEZE ON Command 17
6.45. FREEZE OFF Command 18
6.46. ZOOM – Command 18
6.47. ZOOM + Command 18
6.48. FOCUS - Command 18
6.49. FOCUS + Command 18
6.50. INPUT 1 Analog RGB Command 18
6.51. INPUT 1 SCART Command 19
6.52. INPUT 1 DVI (PC Digital) Command 19
6.53. INPUT 1 DVI (AV HDCP) Command 19
6.54. LENS SHIFT UP Command 19
6.55. LENS SHIFT DOWN Command 19
6.56. LENS SHIFT LEFT Command 19
6.57. LENS SHIFT RIGHT Command 20
6.58. AUTO PC ADJ. Command 20
6.59. PRESENTATION TIMER Command 20
6.60. KEYSTONE ↑Command 20
6.61. KEYSTONE ↓Command 20
7. Status Read Command 21
7.1. Format 21
7.2. Transfer Example 21
7.3. Status Read Command 22
7.4. Input Mode Read Command 24
7.5. Lamp Time Read Command 24
7.6. Setting Read Command 24
7.7. Temp Read Command 25

7.8. Lamp Mode Read Command 25

1. Overview

1.1. These specifications define projector control commands for PLC-XT25 (1.0” XGAIII).

1.2. The projector control commands are used to remotely control a projector through RS-232C from a computer.

2. Serial Interface Specifications

2.1. Transfer Specifications

Item	Specifications
Synchronous system	Asynchronous
Transmission Speed	9600 / 19200
Data Length	8 bit
Parity	N/A
Stop Bit	1
Flow Control	N/A

1) Transmission speed: initial setting value is 19200.

2) Transmission speed can be changed in service mode.

2.2. Connection

Dedicated serial cable must be used for connection to a computer and a projector.

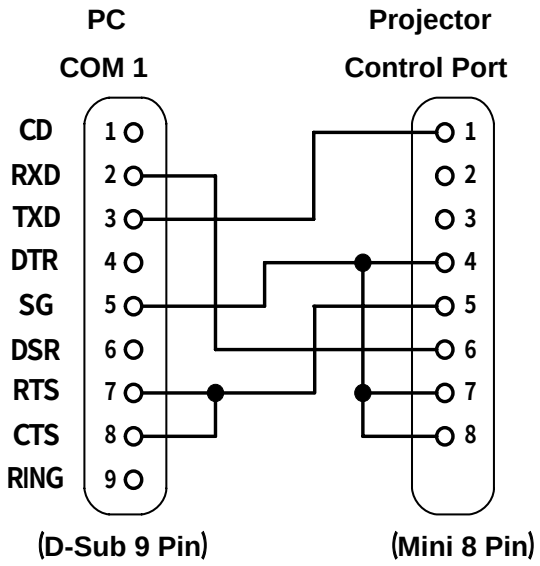

3. Notes for Communication

3.1. The projector control command is defined as one command/one line that starts with “C” and ends with carriage return (0x0D).

3.2. When the projector receives carriage return (0x0D), decoding starts.

3.3. There are two types of Commands: Functional Execution Commands, which execute the same function as the projector keys and remote control, and Status Read Commands, which get the basic status of the projector.

Example of Functional Execution Command: “C05” [CR]

Example of Status Read Command: “CR0” [CR]

3.4. It clears the information of buffer in the cases below.

3.4.1. When the projector receives LF (0x0A) or EOF (0x1A)

3.4.2. When it takes more than one second to receive one command (until the projector receives carriage return since it has received the first data)

3.5. For the pipelining of Functional Execution Command, wait for the following interval time after receiving a response.

3.5.1. Commands “VOLUME+/-“, “ZOOM UP/DOWN”, “FOCUS UP/DOWN” and “LENS-SHIFT UP/DOWN/LEFT/RIGHT” → 100ms

3.5.2. Other Commands → 500ms

3.6. For the pipelining of Status Read Command, wait for the interval time of 500ms at least after receiving a response.

3.7. When a command is issued before receiving a response, the function is not executed properly except when there is no Response for more than 5 seconds.

3.8. It takes <u>about 7 seconds</u> for internal initialization after plugging in AC power. During this time, it cannot process commands. Do not issue any command.

3.9. Internal initialization and lamp lighting is executed during 7 seconds after powering on in Standby mode. When the command is sent during this time, ACK value is returned but the function is not executed. However, Status Read Command is executed 500ms after receiving ACK value for Power ON command.

3.10. During countdown and cooling down:

When the command is received during countdown after Power ON and cooling down after Power OFF, ACK value is returned but the function is not executed. However, Status Read Command can be executed.

3.11. On switching INPUT

During 5 seconds after switching action has started in response to reception of INPUT switching command, ACK value is returned but the function is not executed when command is received.

However, for Status Read Command, the function is executed in 500ms after receiving ACK value for INPUT switching command.

3.12. The number of characters of response to Status Read Commands depends on commands.

Please see [7. Status Read Commands].

3.13. Characters for commands must be Capital (A - Z).

4. Functional Execution Command Table

Command	Item	Command	Item
C00	POWER ON	C20	BRIGHTNESS +
C01	POWER OFF (Quick Power OFF)	C21	BRIGHTNESS -
C02	POWER OFF	C22	―――
C03	―――	C23	INPUT 2 VIDEO
C04	―――	C24	INPUT 2 Y,Pb/Cb,Pr/Cr
C05	INPUT 1	C25	INPUT 2 RGB
C06	INPUT 2	C26	―――
C07	INPUT 3	C27	IMAGE
C08	NETWORK	C28	ON START Enable
C09	VOLUME +	C29	ON START Disable
C0A	VOLUME -	C2A	POWER MANAGEMENT READY
C0B	SOUND MUTE ON	C2B	POWER MANAGEMENT OFF
C0C	SOUND MUTE OFF	C2C	―――
C0D	VIDEO MUTE ON	C2D	―――
C0E	VIDEO MUTE OFF	C2E	POWER MANAGEMENT SHUT DOWN
C0F	SCREEN NORMAL SIZE (4:3)	C2F	―――
C10	SCREEN WIDE SIZE (16:9)	C30	D.ZOOM +
C11	―――	C31	D.ZOOM -
C12	―――	C32	INPUT 3 AUTO
C13	―――	C33	INPUT 3 VIDEO
C14	―――	C34	INPUT 3 S-VIDEO
C15	―――	C35	―――
C16	―――	C36	―――
C17	―――	C37	―――
C18	―――	C38	―――
C19	―――	C39	―――
C1A	―――	C3A	POINTER RIGHT
C1B	―――	C3B	POINTER LEFT
C1C	MENU ON	C3C	POINTER UP
C1D	MENU OFF	C3D	POINTER DOWN
C1E	DISPLAY CLEAR	C3E	―――
C1F	―――	C3F	ENTER

――― means no function.

Command	Item	Command	Item
C40	———	C80	———
C41	———	C81	———
C42	———	C82	———
C43	FREEZE ON	C83	———
C44	FREEZE OFF	C84	———
C45	———	C85	———
C46	ZOOM -	C86	———
C47	ZOOM +	C87	———
C48	———	C88	———
C49	———	C89	Auto PC ADJ.
C4A	FOCUS -	C8A	PRESENTATION TIMER
C4B	FOCUS +	C8B	———
C4C	———	C8C	———
C4D	———	C8D	———
C4E	———	C8E	KEYSTONE ↑
C4F	———	C8F	KEYSTONE ↓
C50	INPUT 1 Analog RGB	C90	———
C51	INPUT 1 Scart	C91	———
C52	INPUT 1 DVI (PC Digital)	C92	———
C53	INPUT 1 DVI (AV HDCP)	C93	———
C54	Computer Component	C94	———
C55	———	C95	———
C56	———	C96	———
C57	———	C97	———
C58	———	C98	———
C59	———	C99	———
C5A	———	C9A	———
C5B	———	C9B	———
C5C	———	C9C	———
C5D	LENS SHIFT UP	C9D	———
C5E	LENS SHIFT DOWN	C9E	———
C5F	LENS SHIFT LEFT	C9F	———
C60	LENS SHIFT RIGHT	———	———

——— means no function.

5. Status Read Command Table

Command	Item	Memo
CR0	Status Read	
CR1	Input Mode Read	
CR2	———	
CR3	**(Corresponding) Lamp Time Read**	
CR4	Setting Read	
CR5	———	
CR6	Temp Read	
CR7	Lamp Mode Read	
CR8	———	
CR9	———	
CRA	———	
CRB	———	
CRC	———	

——— means no function.

6. Functional Execution Command

6.1. Format

6.5.1. PC issues a command in format as below.

"C" COMMAND [CR]

Command: two characters (See Basic Functional Execution Command Table)

6.5.2. A projector changes received data to decode and returns a result after being ready to receive next command.

[ACK] [CR]：(0x06、0x0D) When received Functional Execution Commands.

6.5.3. **"？" [CR]**：When the received data cannot be decoded.

6.2. Command Pipelining

When some functions need the command pipelining (Volume +/-, Zoom +/-, etc), the performance is the same as that of the remote control;

6.2.1. System: issue any command every 100 ms.

6.2.2. When receiving the appropriate command, the function is executed for 120 ms from the moment.

6.2.3. When receiving the same command continuously within 120 ms, the function is executed for another 120 ms from the moment.

6.2.4. When there is no incoming command after 120 ms, the execution of pipelining is stopped.

6.2.5. When the projector receives other incoming commands within 120ms, the execution of pipelining is stopped.

6.3. Transfer Example

Switch the projector to video mode with Basic Command.

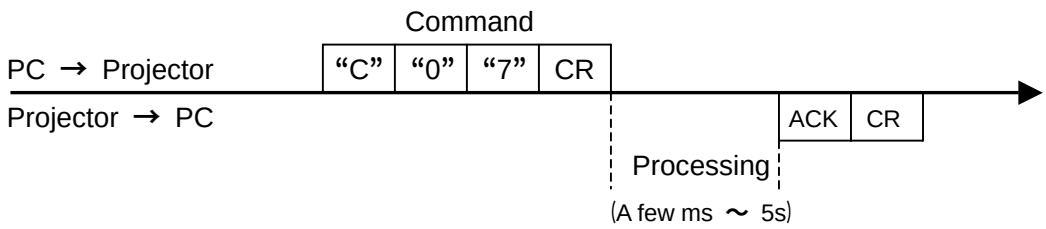

6.4. Operation Requirements

When the projector's status in this below, Functional Execution Commands are limited.

Projector Status	Available Functional Execution Commands
Standby Mode	C00：POWER ON
Countdown in process	C00：POWER ON → Countdown is terminated C01：POWER OFF C02：POWER OFF → Countdown is terminated C46：ZOOM - C47：ZOOM + C4A：FOCUS - C4B：FOCUS + C5D：LENS SHIFT UP C5E：LENS SHIFT DOWN C5F：LENS SHIFT LEFT C60：LENS SHIFT RIGHT
Cooling Down in process	NONE
Cooling Down due to Abnormal Temperature	NONE
Abnormal Temperature Status	NONE
Power Save / Cooling Down in process	NONE
Power Save Status	C00：POWER ON C01：POWER OFF
Cooling Down after Power OFF due to lamp failure	NONE

Note) When the status is as above, even if the projector receives other commands,

it returns **[ACK] [CR].**

6.5. POWER ON Command

Command	"C00" [CR]	
Detail	Power ON When already Power is ON, nothing is done. When sending this command during Countdown in process, Countdown is terminated.	
Response	Acceptable	[ACK] [CR]
	Unacceptable	**" ? "**[CR]

6.6. POWER OFF Command (Quick Power OFF)

Command	"C01" [CR]	
Detail	Power OFF (Standby) When Power is OFF with ON-OFF button of the projector and remote control, "Power OFF?" is displayed. However, as soon as this command is sent, Quick Power OFF is executed.	
Response	Acceptable	[ACK] [CR]
	Unacceptable	**" ? "**[CR]

6.7. POWER OFF Command

Command	"C02" [CR]	
Detail	Power OFF (Standby). The command operates the same way Power OFF function as ON/STAND-BY button of the projector and remote control. Once this command is sent, "Power OFF?" is displayed. If this command is sent again while it is displayed, Power OFF is executed. When sending this command during Countdown, Countdown is terminated.	
Response	Acceptable	[ACK] [CR]
	Unacceptable	**" ? "**[CR]

6.8. INPUT 1 Command

Command	"C05" [CR]	
Detail	Select Input 1. This command operates differently from "Input 1" key of the remote control. When INPUT 1 is already selected, this command does not execute the source switching. (Just for switching to Input 1)	
Response	Acceptable	[ACK] [CR]
	Unacceptable	**" ? "**[CR]

6.9. INPUT 2 Command

Command	"C06" [CR]	
Detail	Select Input 2. This command operates differently from "Input 2" key of the remote control. When Input 2 is already selected, this command does not execute the source switching. (Just for switching to Input 2)	
Response	Acceptable	[ACK] [CR]
	Unacceptable	**" ? "**[CR]

6.10. INPUT 3 Command

Command	"C07" [CR]	
Detail	Select INPUT 3. This command operates differently from "Input 3" key of the remote control. When INPUT 3 is already selected, this command does not execute the source switching. (Just for switching to Input 3)	
Response	Acceptable	[ACK] [CR]
	Unacceptable	**" ? "**[CR]

6.11. NETWORK Command

Command	"C08" [CR]	
Detail	Select Network Input	
Response	Acceptable	[ACK] [CR]
	Unacceptable	**" ? "**[CR]

6.12. VOLUME + Command

Command	"C09" [CR]	
Detail	Volume Up. This command operates the same way as VOLUME + button of the projector and remote control.	
Response	Acceptable	[ACK] [CR]
	Unacceptable	**" ? "**[CR]

6.13. VOLUME – Command

Command	"C0A" [CR]	
Detail	Volume Down This command operates the same way as VOLUME – button of the projector and remote control.	
Response	Acceptable	[ACK] [CR]
	Unacceptable	**" ? "**[CR]

6.14. SOUND MUTE ON Command

Command	"C0B" [CR]	
Detail	Sound Mute ON. This command works the same way as "MUTE" button of the remote control for Mute ON, but does not work for Mute OFF.	
Response	Acceptable	[ACK] [CR]
	Unacceptable	**" ? "**[CR]

6.15. SOUND MUTE OFF Command

Command	“C0C” [CR]	
Detail	Sound Mute OFF. This command works the same way as “MUTE” button of the remote control for Mute OFF, but does not work for Mute ON.	
Response	Acceptable	[ACK] [CR]
	Unacceptable	**“ ? ”**[CR]

6.16. VIDEO MUTE ON Command

Command	“C0D”[CR]	
Detail	Video Mute ON. This command works the same way as “NO SHOW” button of the remote control for No Show ON, but does not work for No Show OFF.	
Response	Acceptable	[ACK] [CR]
	Unacceptable	**“ ? ”**[CR]

6.17. VIDEO MUTE OFF Command

Command	“C0E” [CR]	
Detail	Video Mute OFF. This command works the same way as “NO SHOW” button of remote control for No Show OFF, but does not work for No Show ON.	
Response	Acceptable	[ACK] [CR]
	Unacceptable	**“ ? ”**[CR]

6.18. Screen Normal size Command

Command	“C0F” [CR]	
Detail	Set screen size to Normal (4:3).	
Response	Acceptable	[ACK] [CR]
	Unacceptable	**“ ? ”**[CR]

6.19. Screen Wide size Command

Command	“C10” [CR]	
Detail	Set screen size to Wide (16:9).	
Response	Acceptable	[ACK] [CR]
	Unacceptable	**“ ? ”**[CR]

6.20. MENU ON Command

Command	“C1C” [CR]	
Detail	Display Menu of On Screen Display.	
Response	Acceptable	[ACK] [CR]
	Unacceptable	**“ ? ”**[CR]

6.21. MENU OFF Command

Command	“C1D” [CR]	
Detail	Clear Menu of On Screen Display.	
Response	Acceptable	[ACK] [CR]
	Unacceptable	**“ ? ”**[CR]

6.22. DISPLAY CLEAR Command

Command	“C1E” [CR]	
Detail	Clear On Screen Display. Clear On Screen Display unconditionally.	
Response	Acceptable	[ACK] [CR]
	Unacceptable	**“ ? ”**[CR]

6.23. BRIGHTNESS + Command

Command	“C20” [CR]	
Detail	Brightness of User Control +1.	
Response	Acceptable	[ACK] [CR]
	Unacceptable	**“ ? ”**[CR]

6.24. BRIGHTNESS – Command

Command	“C21” [CR]	
Detail	Brightness of User Control –1.	
Response	Acceptable	[ACK] [CR]
	Unacceptable	**“ ? ”**[CR]

6.25. INPUT 2 VIDEO Command

Command	**“**C23**”**[CR]	
Detail	Select Video input in Input 2.	
Response	Acceptable	[ACK] [CR]
	Unacceptable	**“ ? ”**[CR]

6.26. INPUT 2 Y,Pb/Cb,Pr/Cr Command

Command	“C24” [CR]	
Detail	Select Y,Pb/Cb,Pr/Cr input in Input 2.	
Response	Acceptable	[ACK] [CR]
	Unacceptable	**“ ? ”**[CR]

6.27. INPUT 2 RGB Command

Command	"C25"[CR]	
Detail	Select RGB input in Input 2.	
Response	Acceptable	[ACK] [CR]
	Unacceptable	" ? "[CR]

6.28. IMAGE Command

Command	"C27"[CR]	
Detail	Switch Image Setting status. This command operates the same way as "IMAGE" button of the projector.	
Response	Acceptable	[ACK] [CR]
	Unacceptable	" ? "[CR]

6.29. ON START Setting Command

Command	"C28" [CR]	
Detail	Enable Power ON Start. This status is stored in EEPROM and retained regardless of Power OFF/ON.	
Response	Acceptable	[ACK] [CR]
	Unacceptable	" ? "[CR]

6.30. ON START Cancel Command

Command	"C29" [CR]	
Detail	Disable Power ON Start. This status is stored in EEPROM and retained regardless of Power OFF/ON.	
Response	Acceptable	[ACK] [CR]
	Unacceptable	" ? "[CR]

6.31. Power Management Ready Command

Command	"C2A" [CR]	
Detail	Set Power Management to Ready mode. This status is stored in EEPROM and retained regardless of Power ON/OFF.	
Response	Acceptable	[ACK] [CR]
	Unacceptable	" ? "[CR]

6.32. Power Management OFF Command

Command	"C2B" [CR]	
Detail	Set Power Management OFF. This status is stored in EEPROM and retained regardless of Power ON/OFF.	
Response	Acceptable	[ACK] [CR]
	Unacceptable	" ? "[CR]

6.33. Power Management Shut down Command

Command	"C2E" [CR]	
Detail	Set Power Management to Shut down mode. This status is stored in EEPROM and retained regardless of Power OFF/ON.	
Response	Acceptable	[ACK] [CR]
	Unacceptable	**" ? "**[CR]

6.34. D.ZOOM + Command

Command	"C30" [CR]	
Detail	Enter Digital Zoom mode and expand image size. This command works the same way as "D.ZOOM ▲" button of the remote control.	
Response	Acceptable	[ACK] [CR]
	Unacceptable	**" ? "**[CR]

6.35. D.ZOOM – Command

Command	"C31" [CR]	
Detail	Enter Digital Zoom mode and reduce image size. This command works the same way as "D.ZOOM ▼" button of the remote control.	
Response	Acceptable	[ACK] [CR]
	Unacceptable	**" ? "**[CR]

6.36. INPUT 3 AUTO Command

Command	"C32" [CR]	
Detail	Select Auto input in Input 3.	
Response	Acceptable	[ACK] [CR]
	Unacceptable	**" ? "**[CR]

6.37. INPUT 3 VIDEO Command

Command	"C33" [CR]	
Detail	Select Video input in Input 3.	
Response	Acceptable	[ACK] [CR]
	Unacceptable	**" ? "**[CR]

6.38. INPUT 3 S-VIDEO Command

Command	"C34" [CR]	
Detail	Select S-video input in Input 3.	
Response	Acceptable	[ACK] [CR]
	Unacceptable	**" ? "**[CR]

6.39. POINTER RIGHT Command

Command	"C3A" [CR]	
Detail	Move the Pointer of On-Screen Display to the right. This command differs from the operation of pointer ">" of the projector and has no function of Volume +.	
Response	Acceptable	[ACK] [CR]
	Unacceptable	**" ? "**[CR]

6.40. POINTER LEFT Command

Command	"C3B" [CR]	
Detail	Move the Pointer of On-Screen Display to the left. This command differs from the operation of pointer "<" of the projector and has no function of Volume -.	
Response	Acceptable	[ACK] [CR]
	Unacceptable	**" ? "**[CR]

6.41. POINTER UP Command

Command	"C3C" [CR]	
Detail	Move up the Pointer of On-Screen Display. This command operates the same way as "▲" button of the projector.	
Response	Acceptable	[ACK] [CR]
	Unacceptable	**" ? "**[CR]

6.42. POINTER DOWN Command

Command	"C3D" [CR]	
Detail	Move down the Pointer of On-Screen Display. This command operates the same way as "▼" button of the projector.	
Response	Acceptable	[ACK] [CR]
	Unacceptable	**" ? "**[CR]

6.43. ENTER Command

Command	"C3F" [CR]	
Detail	This command works the same way as "SELECT" button of the projector and remote control.	
Response	Acceptable	[ACK] [CR]
	Unacceptable	**" ? "**[CR]

6.44. FREEZE ON Command

Command	"C43" [CR]	
Detail	Freeze on-screen image. This command works the same way as "FREEZE" button of the remote control for Freeze ON, but does not work for Freeze OFF.	
Response	Acceptable	[ACK] [CR]
	Unacceptable	**" ? "**[CR]

6.45. FREEZE OFF Command

Command	"C44" [CR]	
Detail	Cancel Freeze mode. This command works the same way as "FREEZE" button of the remote control for Freeze OFF, but does not work for Freeze ON.	
Response	Acceptable	[ACK] [CR]
	Unacceptable	**" ? "**[CR]

6.46. ZOOM – Command

Command	"C46" [CR]	
Detail	Reduce image size. This command works the same way as "ZOOM▼" button of the projector.	
Response	Acceptable	[ACK] [CR]
	Unacceptable	**" ? "**[CR]

6.47. ZOOM + Command

Command	"C47" [CR]	
Detail	Expand image size. This command works the same way as "ZOOM▲" button of the projector.	
Response	Acceptable	[ACK] [CR]
	Unacceptable	**" ? "**[CR]

6.48. FOCUS - Command

Command	"C4A" [CR]	
Detail	Adjust on-screen focus by making focal length shorter. (The lens moves forward) This command works the same way as "FOCUS▲" button of the projector.	
Response	Acceptable	[ACK] [CR]
	Unacceptable	**" ? "**[CR]

6.49. FOCUS + Command

Command	"C4B" [CR]	
Detail	Adjust on-screen focus by making focal length longer. (The lens moves backward) This command works the same way as "FOCUS▲" button of the projector.	
Response	Acceptable	[ACK] [CR]
	Unacceptable	**" ? "**[CR]

6.50. INPUT 1 Analog RGB Command

Command	"C50" [CR]	
Detail	Select Analog RGB input in Input 1.	
Response	Acceptable	[ACK] [CR]
	Unacceptable	**" ? "**[CR]

6.51. INPUT 1 SCART Command

Command	“C51” [CR]	
Detail	Select Scart input in Input 1.	
Response	Acceptable	[ACK] [CR]
	Unacceptable	**“ ? ”**[CR]

6.52. INPUT 1 DVI (PC Digital) Command

Command	“C52” [CR]	
Detail	Select DVI (PC Digital) input in Input 1.	
Response	Acceptable	[ACK] [CR]
	Unacceptable	**“ ? ”**[CR]

6.53. INPUT 1 DVI (AV HDCP) Command

Command	“C53” [CR]	
Detail	Select DVI (AV HDCP) input in Input 1.	
Response	Acceptable	[ACK] [CR]
	Unacceptable	**“ ? ”**[CR]

6.54. LENS SHIFT UP Command

Command	“C5D” [CR]	
Detail	Move projection area upward.	
Response	Acceptable	[ACK] [CR]
	Unacceptable	**“ ? ”**[CR]

6.55. LENS SHIFT DOWN Command

Command	“C5E” [CR]	
Detail	Move projection area downward.	
Response	Acceptable	[ACK] [CR]
	Unacceptable	**“ ? ”**[CR]

6.56. LENS SHIFT LEFT Command

Command	“C5F” [CR]	
Detail	Move projection area to the left.	
Response	Acceptable	[ACK] [CR]
	Unacceptable	**“ ? ”**[CR]

6.57. LENS SHIFT RIGHT Command

Command	"C60" [CR]	
Detail	Move projection area to the right.	
Response	Acceptable	[ACK] [CR]
	Unacceptable	**" ? "**[CR]

6.58. AUTO PC ADJ. Command

Command	"C89" [CR]	
Detail	Execute Auto PC Adj. function. This command works the same way as "AUTO PC ADJ." button of the remote control. Sending this command during Auto PC Adj. process terminates the operation. This is the same by "AUTO PC ADJ." button of the remote control.	
Response	Acceptable	[ACK] [CR]
	Unacceptable	**" ? "**[CR]

6.59. PRESENTATION TIMER Command

Command	"C8A" [CR]	
Detail	Execute Presentation Timer. This command works the same way as "P-TIMER" button of the remote control.	
Response	Acceptable	[ACK] [CR]
	Unacceptable	**" ? "**[CR]

6.60. KEYSTONE ↑Command

Command	"C8E" [CR]	
Detail	Correct keystone distortion by reducing upper part of image. This command executes both keystone distortion correction and OSD display regardless of whether the "KEYSTONE" OSD has been displayed or not.	
Response	Acceptable	[ACK] [CR]
	Unacceptable	**" ? "**[CR]

6.61. KEYSTONE ↓Command

Command	"C8F" [CR]	
Detail	Correct keystone distortion by reducing down part of image. This command executes both keystone distortion correction and OSD display regardless of whether the "KEYSTONE" OSD has been displayed or not.	
Response	Acceptable	[ACK] [CR]
	Unacceptable	**" ? "**[CR]

7. Status Read Command

7.1. Format

7.1.1. PC issues commands in format as below;

"CR" Command [CR]

Command：1 character（See Basic Status Read Command Table）

7.1.2. When a projector receives the appropriate command, it returns a character line as the required data.

Required Data [CR]

Required Data：A character line（See Basic Status Read Command Table）

7.1.3. When the received data cannot be decoded, the projector returns **"?" [CR]**.

7.2. Transfer Example

Get input mode for projector with basic commands

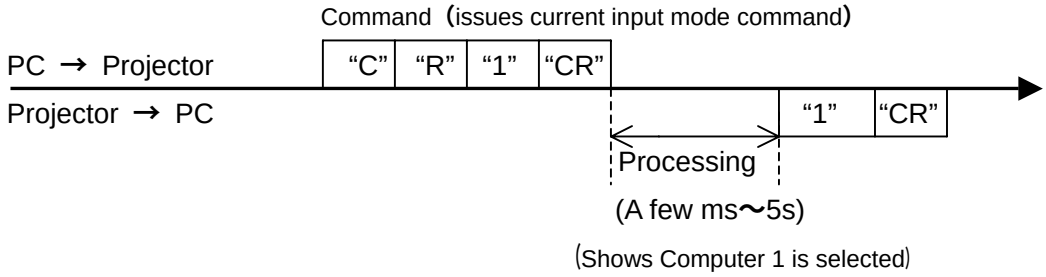

7.3. Status Read Command

Command	“CR0” [CR]	
Detail	Get the projector’s operating status	
Response	Acceptable	“%1” [CR]
	%1	”00” = Power ON “80” = Standby “40” = Countdown in process “20” = Cooling Down in process “10” = Power Failure “28” = Cooling Down in process due to Temperature Anomaly “88” = Coming back after Temperature Anomaly “24” = Power Save/Cooling Down in process “04” = Power Save “21” = Cooling Down in process due to lamp failure “81” = Standby after Cooling Down due to lamp failure
	Unacceptable	“?” [CR]

[Details of Response]

7.3.1. “00” [CR]

Status: Power ON

Normal image is on the screen.

7.3.2. “80” [CR]

Status: Standby

When the status is Standby, Status Read Commands are always acceptable, but Functional Execution Commands are not acceptable except POWER ON Command.

7.3.3. “40” [CR]

Status: Countdown in process

When “Display” in Setting Menu is ON and POWER ON is executed, it starts processing Countdown.

When “Display” in Setting Menu is OFF, Countdown in process is canceled and the status quickly moves to Power ON.

7.3.4. “20” [CR]

Status: Cooling Down in process

When the status is Power ON, and POWER OFF Command (“C01”[CR]) is executed, it moves to Cooling Down status.

This status automatically moves to Standby after lamp turns off and the fan spin finishes after about 90 seconds. The fan spin time depends on a model.

This function is used to cool down the lamps and other optical parts and is quite important for projector’s reliability.

During this time, Functional Execution Commands are invalid.

7.3.5. “10” [CR]

Status: Power Failure

When the power supply voltage inside the projector reaches abnormal status, the projector is automatically turned off. The projector returns “10”[CR], which shows it moves to Power OFF status due to power failure. Fan also stops unlike Cooling Down status.

7.3.6. “28” [CR]

Status: Cooling Down in process due to Temperature Anomaly

When the inside temperature is out of the operating temperature, it automatically starts Cooling Down. Response for this status is “28”[CR].

Even if the temperature decreases during this process, Cooling Down is executed.

7.3.7. “88”[CR]

Status: Coming back after temperature anomaly

When the status moves to Standby after Cooling Down due to temperature anomaly, it returns “88” [CR].

This shows that the status turns to Standby because of abnormal temperature.

This status maintains until next operation is done. When Power On is executed, the information of temperature anomaly is canceled and normal operation is executed.

7.3.8. “24”[CR]

Status: Power Save / Cooling Down in process

Power management function in Setting menu works and the status goes to Power Save / Cooling Down.

During this time, Functional Execution Commands are invalid (not executed).

This status moves to Power Save at set hours after the operation of Cooling Down.

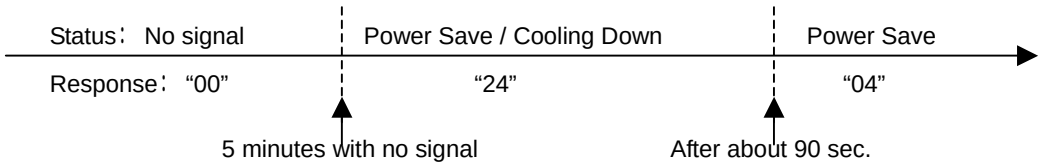

7.3.9. “04”[CR]

Status: Power Save

This shows that it moves to Power Save status by Power management function in Setting menu.

7.3.10. “21”[CR]

Status: Cooling down in process after OFF due to lamp failure

When the projector status is turned off due to lamp failure, it automatically starts Cooling down. The projector returns “21”[CR]. “21”[CR] has been kept during Cooling down operation.

7.3.11. “81”[CR]

Status: Standby after Cooling down due to lamp failure

The projector has recovered from Lamp Failure status. When the projector enters Standby mode after Cooling down operation invoked due to lamp failure, it returns “81”[CR]. This indicates the status turns to Standby due to lamp failure.

This status continues until the next operation is started; when Power ON is executed, the projector clears the information of Lamp Failure and normal operation starts.

7.4. Input Mode Read Command

Command	“CR1” [CR]	
Detail	Get the selected Input No.	
Response	Acceptable	“%1” [CR]
	%1	”1” = Input 1 is selected ”2” = Input 2 is selected ”3” = Input 3 is selected ”4” = Input 4 is selected
	Unacceptable	“?” [CR]

7.5. Lamp Time Read Command

Command	“CR3” [CR]	
Detail	Get the total lamp running hours (corresponding value).	
Response	Acceptable	“%1” [CR]
	%1	Shows the time period with 5 digits numbers. Example：“00410”[CR] ••••shows 410 hours
	Unacceptable	“?” [CR]

7.6. Setting Read Command

Command	“CR4” [CR]	
Detail	Get the screen setting status such as Ceiling / Rear.	
Response	Acceptable	“%1” [CR]
	%1	“11”[CR] = Normal Screen Setting “10”[CR] = Picture is top/bottom reversed. (Status: Rear＆Ceiling ON) “01”[CR] = Picture is left/right reversed. (Status: Rear ON) “00”[CR] = Picture is top/bottom and left/right reversed. (Status: Ceiling ON)
	Unacceptable	“?” [CR]

7.7. Temp Read Command

Command	"CR6" [CR]	
Detail	Get the temperature data inside the projector. With some temperature sensors installed in the projector, it is possible to get all the temperature at once.	
Response	Acceptable	"%1_%2_%3" [CR]
	%1 %2 %3	%1＝Temperature of sensor 1 %2＝Temperature of sensor 2 %3＝Temperature of sensor 3 Temperature data is shown as "00.0". When the temperature goes down to -, the first character becomes "-" instead of a space, like "-05.5" [CR]. When no temperature data can be returned due to hardware problems, the first character becomes "E" like"E00.0" [CR]. When several temperature sensors are equipped, Responses are returned continuously. "_31.5 _ _*35.2* _ _33.4"[CR] The first data is sensor 1, then one space, and the data of sensor 2 follows.
	Unacceptable	**" ? "**[CR]

7.8. Lamp Mode Read Command

Command	"CR7" [CR]	
Detail	Get lamp mode. The projector with single lamp get ON/OFF status of the lamp.	
Response	Acceptable	"%1" [CR]
	%1	"00"[CR] = Lamp is OFF. "01"[CR] = Lamp is ON.
	Unacceptable	**" ? "**[CR]